UDNewsline
NC STATE UNIVERSITY
Quarterly Newsletter of THE CENTER FOR **UNIVERSAL DESIGN**
Volume 2, Number 3
July 1999

Future Housing Now:
The Next Generation Home
By Rex J. Pace

It has been nearly two decades since Ron Mace coined the term "universal design," yet we are just beginning to see the emergence of this concept in the mainstream housing market. The promotion and marketing of several recent projects are bringing visibility to the concept of universal design in housing. One noteworthy development is the "Next Generation Universal Home." This project, one of the last that Ron worked on, represents the collective experience of the Center staff and identifies specific features and design elements which can be incorporated into every home.

The Next Generation Universal Home was developed by the Center in collaboration with the *Wall Street Journal.* The newspaper, while planning a feature describing future housing trends for the retiree market, sought the Center's assistance to define "the house of the future." We created the concept design illustration (pages 6-7), to show how housing can evolve to satisfy the needs of a changing market while retaining many of the features that most home buyers request. The term "next generation" recognizes that new home design is not accomplished in radical shifts, but as part of an evolution in thinking. The original illustration accompanied the article, "Down with Doorknobs," in the September 14, 1998 issue of the *Wall Street Journal.*

The primary goal in developing the Next Generation Universal Home was to raise awareness of what is possible using current building methods and technology. The house was conceived as a holistic environment–living spaces designed, not for specific users, but for everyone.

The basic layout of the home is based on typical American house designs currently being constructed in the U.S. Moderate to upper-end suburban house styles were used as models to demonstrate that universal concepts can be effective in popular home styles and do not require unconventional or "space age" approaches.

continued on page 3

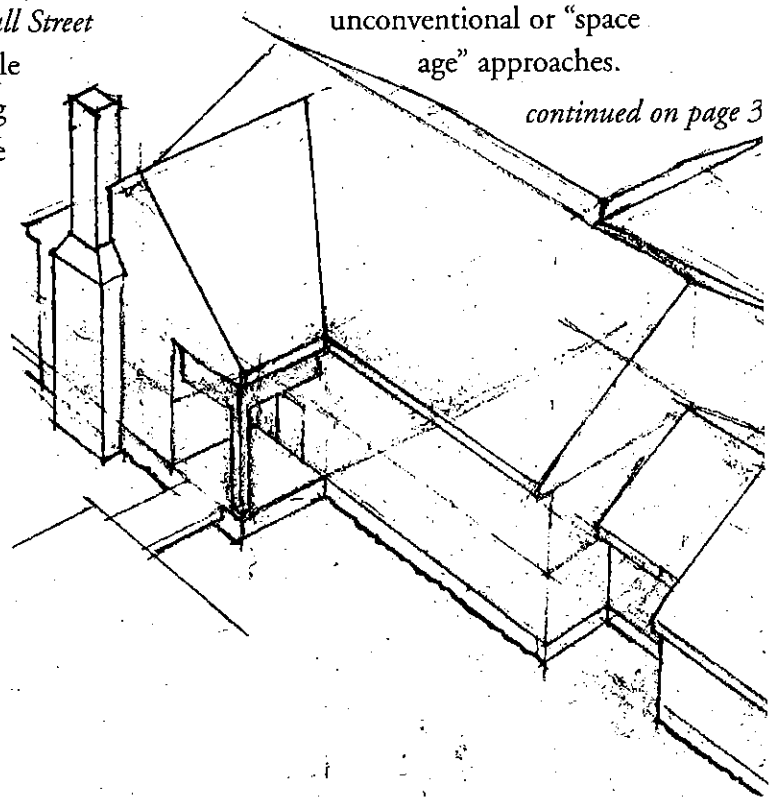

Editor's Corner

by Andrea Gabriel

Express Yourself!

I was sitting in the darkened performance hall with about 200 other people listening to the crystalline voice of Lisa Thorson work into Cole Porter's "Let's Do It." A blue light illuminated her pale brown hair, behind her, the band–piano player, bassist and drummer, and a wicked cool saxophonist with a tangle of blonde hair, aptly named Circie. At the other end of the stage, a petite dark-haired woman dressed all in black moved about frenetically. Her clothing was speckled with the colorful drippings of paint she applied to a large canvas–an abstract painting of Lisa and her band in brilliant turquoise, purple, white, electric blue, black, and scarlet. She slapped the paint on in hurried gestures, her legs and arms jerking out wildly, patterning to the music. Next to her, a signer was interpreting Lisa's version of "I Love Being Here With You." Expressive large, brown eyes in a tiny round face; signer body stretched and soared, fingers, hands and arms flying and inviting audience participation. Below the stage to the left a CART reader spat out lyrics onto an 8 foot screen. A few feet away a deaf/blind interpreter signed for an audience of one.

"JAZZ ART SIGNS," this multimedia performance, was an experiment sponsored in part by Very Special Arts, Massachusetts as a component of their Cultural Access Institute (CAI). I was spending the week in Cambridge, on the banks of the Charles River along with folks from all over the United States attending CAI. We were all there to learn about physical and programmatic access to the arts and cultural institutions.

By week's end, we had participated in disability awareness activities, discussed the history of disability rights, watched videos and performances and attended lectures. We completed site surveys of museums and other cultural institutions.

When people don't have adequate housing or access to transportation, healthcare, and public facilities, its difficult to make a plea for the arts. Yet *creative expression* is a primal need of everyone. And to express oneself creatively is to *communicate* and *move* in some direction.

Find expression. Create movement and meaning. Draw or sculpt, dance, beat drums, sing, weave, or grow a garden. But move. Regardless of your abilities, move.

Oh yeah, Lisa Thorson was a wheelchair user and could she move!

UD Newsline is published quarterly by The Center for Universal Design. The Center's mission is to improve the built environment and related products for all users by impacting change in policies and procedures through research, information, training, and design assistance.

The annual subscription is $25 per format. Please use the form on page 11 of this newsletter.

The Center for Universal Design
NC State University
School of Design, Box 8613
Raleigh, NC 27695-8613
1-800-647-6777 (Voice and TTY)
http://www.design.ncsu.edu/cud

EDITOR — *Andrea Gabriel*
DESIGNER — *Robert Rock*

Unless otherwise indicted, photographs and illustrations are from The Center for Universal Design.

Major funding provided by the National Institute on Disability and Rehabilitation Research of the U.S. Department of Education under grant # H133E40003.

Future Housing Now: *The Next Generation Home*

continued from page 1

Features like reinforced walls for grab bars and level entrances, while easy to implement, run counter to traditional construction methods. The house layout reflects some recent trends in house design that are likely to continue. Many of these are conducive to and supported by universal design concepts, most notably the idea of open, or flexible-use spaces. A first floor master bedroom and bath can be used as a suite for care of an elderly parent or relative if necessary. An additional first floor bedroom can be designed to accommodate guests or double as a home office. Compartmentalized baths can be used by more than one person. Other popular spaces such as a "mudroom," a shared bathroom, spacious master baths and walk-in closets, and a computer "niche" have been included.

In comparison to most of the fixed features of the past, this design relies on *adjustability* to accommodate the widest range of users. Height-adjustable counter tops are used in the kitchen and bathrooms. Rotating and adjustable height shelves maximize storage. Toilets have height adjustable seats. Bathing spaces allow more than one method of use–standing, sitting, or reclining–including the multi-mode bathing fixture concept developed by the Center. All of the illustrated features are technically possible now, although some are not widely available. Features such as adjustable counter tops or vertical rotating shelves are available in very limited choices, while others such as the multi-mode bathing fixture are not currently manufactured.

One obvious element of the Next Generation Universal Home is its upper floor. This may run counter to many people's notion of what is a universally designed home. However, two-story homes will continue to be built because of the savings in construction costs. The Next Generation Universal Home provides several invisible options for efficient and cost saving modifications to gain access to the second story. The first is a stairway designed to accommodate the installation of either a chair or platform lift. The design of the stairway is critical–if the stair turns or if there is insufficient space at the top and bottom of the stairway, lifts often cannot be installed. Here, the stairway width is increased, additional space is provided at the top and bottom of the landing to disembark from and to store a lift, and electrical connections are provided. Second, the house contains stacking storage closets, with removable floors, in the center of the house. The flooring when removed, exposes an elevator shaft. This allows the installation of an elevator without disrupting either the layout or the aesthetics of the house and saves on retrofit costs. The elevator option, while potentially expensive, is integral to the house and less obtrusive than a stair lift.

The Next Generation Universal Home and the work of others reflect the increasing sophistication and application of universal design in single-family home construction. The next century promises new innovations in housing resulting from advances in computer technology, manufacturing processes, materials applications, and areas yet undiscovered. If these are approached in a thoughtful way with a commitment to the end user, more effective solutions than those now existing can be implemented. Ideally, the next generation of housing will be more inclusive and bring our built environment truly closer to a universally usable one.

Rex J. Pace is Coordinator of Technical Assistance at the Center

Stacked closets, storage, or pantry spaces with removable floors can be converted into an elevator shaft if necessary.

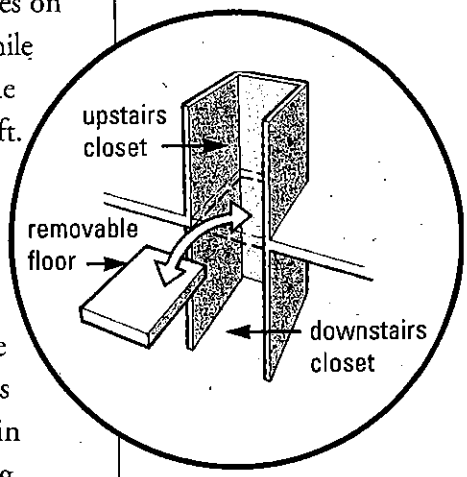

Planning Your Universal Home

By Nancy Hitchcock

Nancy Hitchcock is Information Specialist at the Center

The *Directory of Accessible Building Products, 1999,* published by the National Association of Home Builders, is a valuable resource for locating universal and accessible building products. Contact them at 1-800-638-8556 for ordering information.

As you look at the innovative ideas illustrated in the Next Generation Universal Home featured in this issue, you may be thinking, "Wow, these are great ideas; I want to make the home I am building universal." Whether you are planning to remodel only one room in your home, need sources of house plans, or want information that will help you and your builder create custom house plans, The Center for Universal Design has resources that can help. Call the Center's toll-free Information and Referral Service–800-647-6777– whether you are a consumer or builder. The Center maintains a file of product catalogs and manufacturer sources, and a list of references for printed materials in addition to our own publications.

Most people who call the Center need information for three critical areas: entrances, bathrooms, and kitchens. There are several attractive, universal solutions to entrance accessibility that do not involve building a ramp. In new construction, grading the lot and placing the house so that the house floor and entrance level are close to ground level eliminates the need for a ramp. If you are planning a garage, and local building codes allow, build it with a sloping floor so that the door into the house provides a level entrance. Using an earth fill to gently build up the ground level near the entrance, or building an attractive bridge that goes from a point on the lot that is at the same level as the entrance, creates universal accessibility. For existing homes with no more than a two step entrance, the earth fill strategy is ideal.

Several manufacturers make universal kitchen and bathroom cabinet components. These include cabinets with higher toe kicks and lower counters to accommodate wheelchairs. Both bathroom and kitchen sinks should provide clear kneespace. If you choose cabinets for under the sink, choose ones with doors that fold out to provide knee space; some units can be pulled out entirely. Other cabinets allow upper shelves to be lowered into a convenient reach range for people who are short or who are seated in a wheelchair. Pantry units are available with rotating shelves and full-extension drawer units can be specified so that rear contents can be reached. Side-by-side refrigerators with shelves that easily pull out increase usability for a variety of consumers. For the bathroom, several companies make accessible, prefabricated, curbless showers so that people can enter a shower without stepping over a curb, or seated in a shower chair. Some bathroom sinks mount on the wall leaving a clear space underneath. For conventional bath tubs, locate lever faucet controls on the near side of the tub to avoid reaching.

Before you begin, call us for information. We'll be glad to help plan your universal home.

A garage floor level with the house floor creates a universal entrance.

Photo courtesy of Meredith Publishing

National Projects Feature Universal Design

By Andrea Gabriel and Rex J. Pace

Universal design in housing becomes viable when the concepts and principles are adopted, marketed, and promoted as "standard" rather than "unique." Recent demonstration and marketing projects supported by national leaders in the design and building industries have brought visibility to universal design. Part of the success of these projects is that the marketing language and strategies have become inclusive rather than exclusive. The following projects, on which the Center consulted, illustrate these trends.

At the 1999 International Builders' Show, with an attendance of over 70,000 and an exhibit space of over 500,000 square feet, universal design emerged as a cutting edge topic. "LifeStages 99," the showcase exhibit, incorporated many universal features within its nearly 3,200 square-foot, one-story space: "Built with tomorrow's technology, this manufactured home showcases universal design that lets people gracefully age in place."

Another high-profile industry effort is being undertaken by *Better Homes and Gardens* magazine in their "Blueprint 2000" home project near Chapel Hill, North Carolina. The home's universal features include a unique three-way bathing space combination of tub, roll-in shower and bench. The design will appear in the November 1999 issue of *Better Homes and Gardens* magazine.

Just outside of Richmond, Virginia, national attention was focused recently on "Home 2000," designed by Access Unlimited and built by Hayden Homes. Their marketing materials promote a house with "step-free front and garage entrances, countertops at multiple levels, and a unique 'child-friendly' bathtub with wide cantilevered seat." Electrical outlets are located higher on the walls, light switches lower. The home is similar to other homes in its neighborhood but with many well-designed, value added features.

The work of Ron Wietzel and his company, Amherst Homes, in Cincinnati, Ohio has resulted in one of the most successful attempts of true universal design; several features have been included that are rarely done in residential construction. These include a garage at the same level as the interior floor, horizontal stair handrail extensions, and a location for the future installation of a residential elevator. Mr. Wietzel has also implemented several of his own universal design concepts, among them a tread stair light wired to serve as a power outlet for a lift, and independent "knock out" floor joists painted orange making them easy to identify.

Communicating the value of these innovative designs is tricky. But the industry is learning the value of marketing; universal design in housing might just become the standard. Ron Wietzel, who has spent over 25 years in the industry says, "The future for universal design looks bright. I see the senior-oriented market adopting the idea first, but as people see how well it works for everybody, universal design will expand to all markets."

Andrea Gabriel is Director of Outreach and Dissemination; Rex J. Pace is Coordinator of Technical Assistance at the Center

LifeStages '99 features a glass cupola over the entry foyer connecting to a row of skylights along the length of the house.

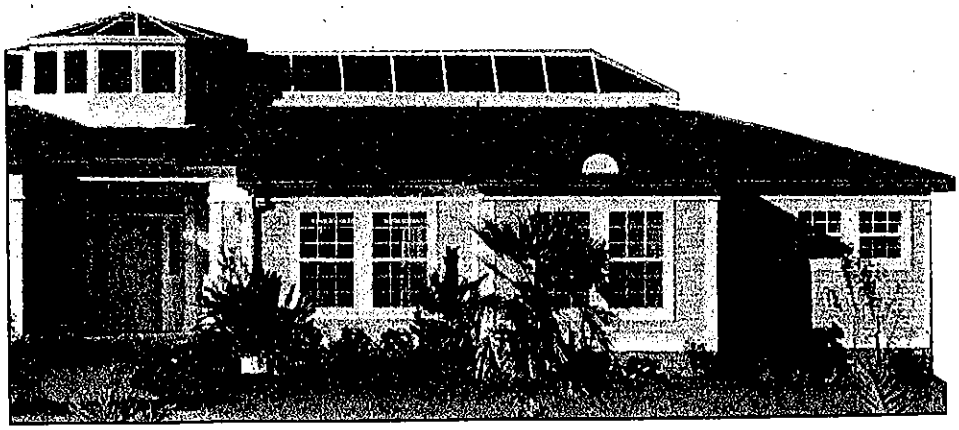

© Hanley-Wood

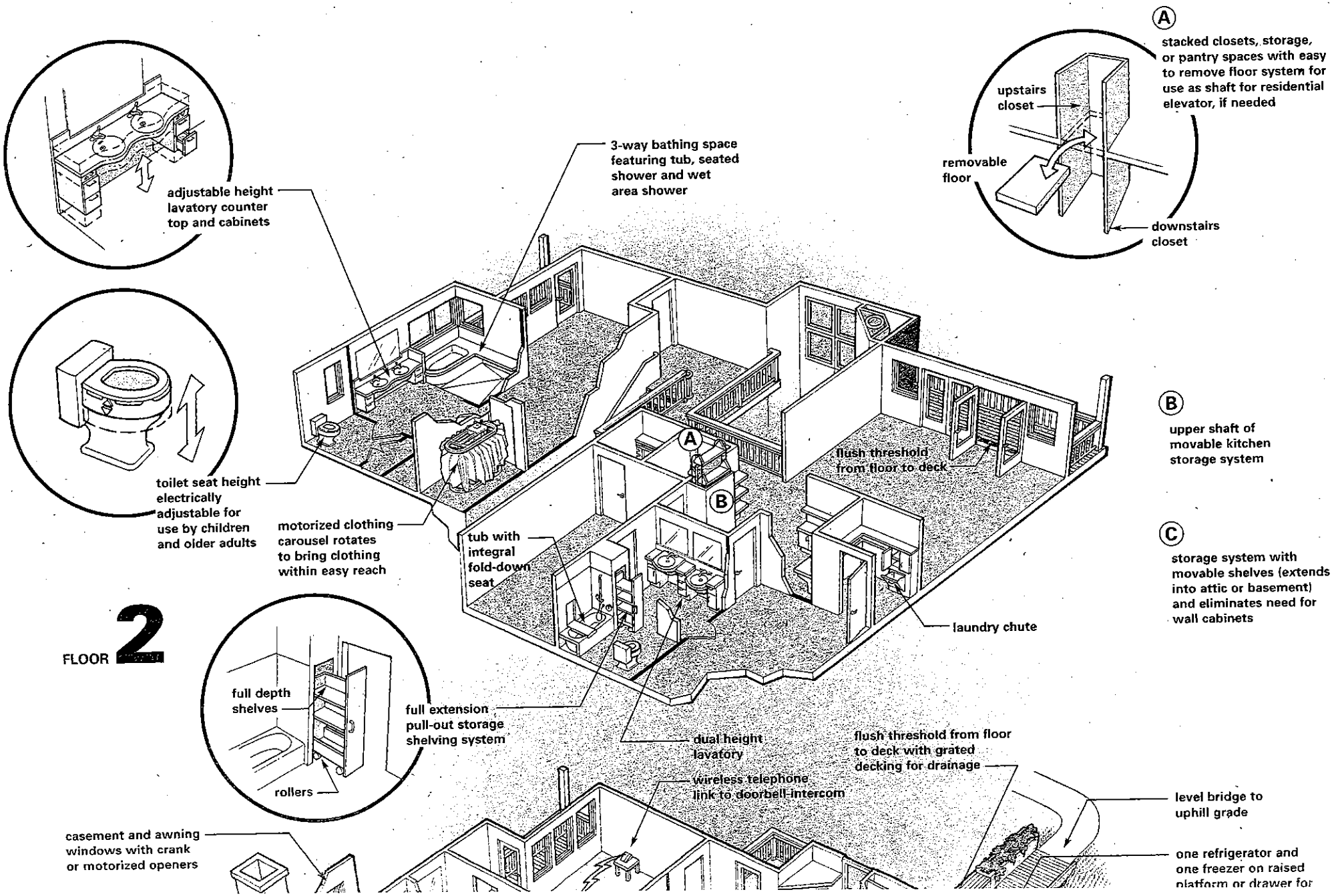
FLOOR 2
adjustable height lavatory counter top and cabinets
toilet seat height electrically adjustable for use by children and older adults
3-way bathing space featuring tub, seated shower and wet area shower
motorized clothing carousel rotates to bring clothing within easy reach
tub with integral fold-down seat
full depth shelves
rollers
full extension pull-out storage shelving system
dual height lavatory
wireless telephone link to doorbell-intercom
casement and awning windows with crank or motorized openers
flush threshold from floor to deck
flush threshold from floor to deck with grated decking for drainage
laundry chute
level bridge to uphill grade
one refrigerator and one freezer on raised platform or drawer for
A
stacked closets, storage, or pantry spaces with easy to remove floor system for use as shaft for residential elevator, if needed
upstairs closet
removable floor
downstairs closet
B
upper shaft of movable kitchen storage system
C
storage system with movable shelves (extends into attic or basement) and eliminates need for wall cabinets

FLOOR 1

treads and risers

microwave oven set at counter height with shelf in front and knee space below

smoke alarm with strobe light

door bell intercom

Ⓒ

Ⓕ

Ⓕ conventional oven mounted low with one rack at same height as adjacent countertop

Ⓔ

clear floor space for platform lift, if needed

level bridge

high contrast signage

package shelf

retaining wall at floor level of house

adjustable height closet rod

front loading washer and dryer raised on platform or drawer

slope

unrestricted air flow for ventilation

earth berm and planting

Ⓓ sunken tub with floor system that converts to wet area or roll-in shower or high and low shower seat

gently sloping walk with no drop off

Ⓔ kitchen counter section with sink and cooktop electrically raises and lowers for comfortable use by all

garage floor flush with house floor at entry, slopes toward outside for venting

vents at bottom of door

Multi-Mode Bathing Fixture

high and low seated shower

sunken tub

roll-in or wet area shower

full extension drawers for storage

dishwasher raised on platform or drawer unit

switches for raising and lowering

Adjustable Height Sink and Cooktop

Next Generation Universal Home

Major funding provided by the National Institute on Disability and Rehabilitation Research, US Department of Education

Living Universal: *A Brief Tour*

by Andrea Gabriel

Andrea Gabriel is Director of Outreach and Dissemination at the Center

"My favorite part of the house is the archway. It separates, yet connects the rooms." Mary Ann Baldwin comments on the open floor plan of her home designed and built five years ago in Raleigh's historic Oakwood District. The house was the first she and husband Jim Baldwin looked at when they began house hunting; she describes entering the house and feeling like it was "home." They bought it straight away.

I took a drive down to Oakwood on a sultry spring afternoon to interview Mary Ann about her house. The Center had some design input with builder Jay Beaman of Beaman Building, and we referred to it here as the "Beaman House." Though it has universal elements, they are subtly integrated within the house structure and facilitate ease of use rather than denoting "accessibility."

Nearly hidden by landscaping, a sloped walk and switchback at the front entrance allows an alternative to the front steps. The wide, wrap-around porch provides areas for sitting and family meals. A ramp off of the back deck is used for easy transport of bicycles and other recreational equipment. Inside, high ceilings give a feeling of spaciousness to a small living area; leaded and stained-glass windows let in plenty of light. The wide archway leading to the dining area has a nice architectural touch–notched "windows" which double as shelves. The kitchen has a low counter section–33"–and is comfortable for Mary Ann and daughter Laura to work at; Jim who is taller manages at an adjacent counter of average height. The kitchen cabinets have custom-built doors that recess into "pockets" when kneespace is needed.

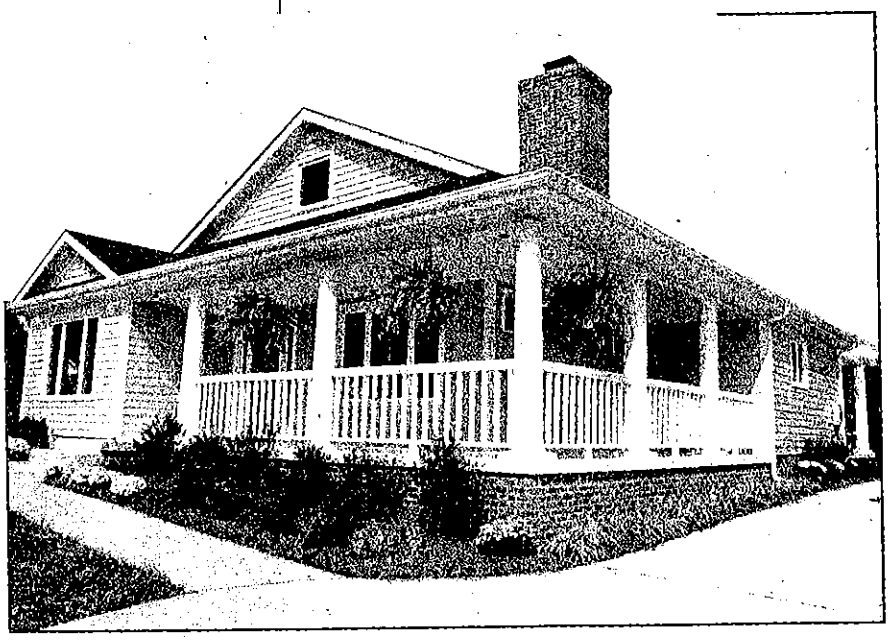

Both bathrooms are large; the master bath has a tub and a separate, curbless shower large enough to accommodate a wheelchair; the steel grab bars on three sides of the shower are a plus. "They make me feel safe, a little more secure. I see them as a safety feature," says Mary Ann. Double pedestal sinks and a pocket door allow lots of room to maneuver. The second bath has a removable cabinet face under sink; the cabinet face is held on with magnets. Pipes are hidden by a front which angles back to the wall.

The house is decorated beautifully with bits of pottery, sculpture and "found" art, brightly patterned rugs and furniture with simple lines reinforcing the elegance of the house. No one in the household *requires* ramps or the roll-in shower or knee room at the kitchen cabinets, but Mary Ann is quick to note that her house is one they can live in for many, many years. "I personally think more houses should be built like this. It increases your options so that you don't have to move later on. It shows you can have a house built with good features."

Sight, Sound and Motion at the School of Design

by David Ringholz

This spring, industrial design, landscape architecture and architecture students at North Carolina State University participated in exercises designed to raise their awareness of barriers within the environment. While simulating visual and mobility restrictions, students navigated the familiar campus, exploring how it performs for people with abilities different from their own. Special glasses were used to simulate blindness and various degrees of visual impairments; students using walkers, canes, wheelchairs, and crutches felt what it was like to have their movements restricted. They explored the campus negotiating steps, entrances, sidewalks, curb cuts, stairways, elevators and drinking fountains. In seminar sessions, they learned how design affects deaf and hard of hearing cultures. As participants in the "Sight, Sound and Motion" workshop, these future designers experienced first-hand obstacles which they had previously overlooked.

The Sight, Sound and Motion program has been introducing design students to these issues for over 25 years. Led by Center for Universal Design staff and NC State architecture professor John Tector, the students were asked to reflect on their experience with obstacles they encountered and make design suggestions for minimizing or eliminating them. It is critical that designers understand the complex implications of their design decisions on people who operate within an environment. This workshop attempts to provide an experiential environment which briefly removes the students from comfortable and known surroundings, to ones that require different sets of physical skills and thinking patterns.

Too often, students make design decisions based on their own experiences. A goal of this workshop is to introduce students to the existence of disabling conditions and the people who experience them. No exercise can effectively simulate life with a disability. To enhance the simulations, expert consultants with vision, hearing, and mobility impairments interact with students, relating first hand experiences of dealing with less than ideal environments and products.

Another goal of the simulation activities is to remind students that disabling conditions are part of a continuum of life experience –that each of us functions at some time with limitations, whether those limitations are imposed by age, (a child or older adult), a temporary injury (broken leg), or with circumstantial limitations (a person with hands full). This helps reinforce the understanding that designers are not designing for a specific population, but for a dynamic *range* of people and abilities.

Sight, Sound and Motion is one module in a long-term approach to introducing design students to universal design principles, one which may influence students throughout their education and as future designers.

The Center for Universal Design is preparing future Sight, Sound and Motion simulation activities for NC State facility managers, designers and staff. This will sensitize another important group of people to universal design and environmental performance issues around the campus.

David Ringholz is Research Assistant Professor at the School of Design, NC State University, and Product Designer and Researcher at the Center

"If you experience it, you will have the ability to incorporate it into your design."

Industrial design student in the Sight, Sound and Motion workshop.

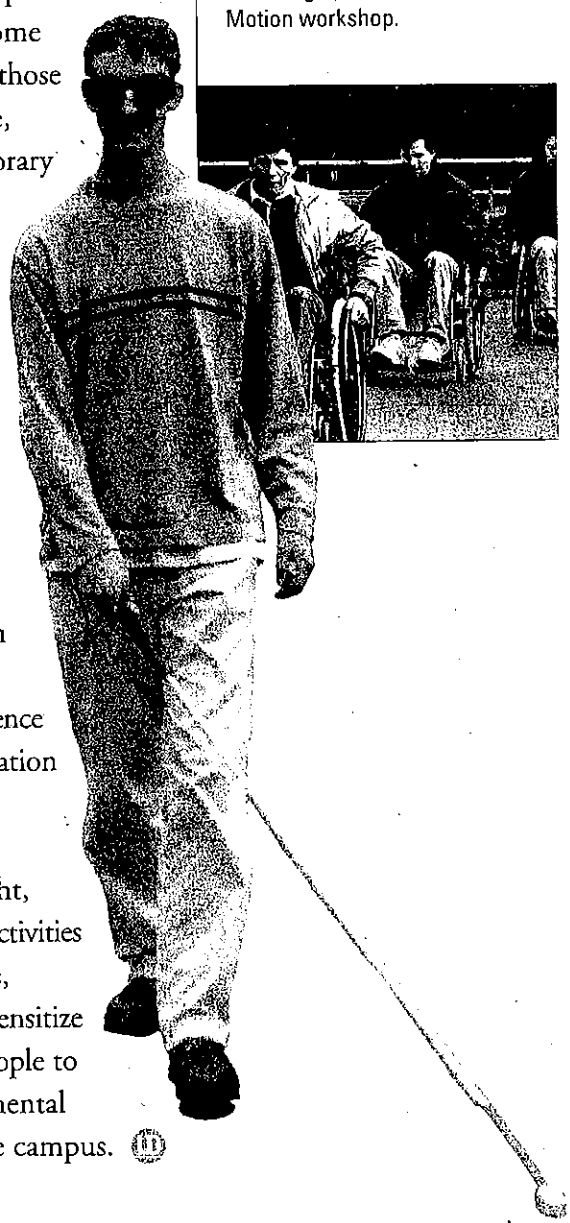

The following is an annotated list of Websites we have found helpful. Where space permits, each issue of *UD Newsline* will feature such sites.

Beneficial Designs, Inc.: http://www.beneficialdesigns.com/

Largely technology and research about assistive devices; however, one section of this site offers a prototype database to recreational trails in the U.S. with search parameters for universal access.

Independent Living Research Utilization at TIRR: http://www.ilru.org/

A thorough reference site which includes a publications list and a searchable on-line library–ILRU-DIMENET, Independent Living Library. The library catalog is searchable by author or subject; many of the publications listed are downloadable, or provide ordering instructions.

National Center for Accessible Media: http://www.wgbh.org/wgbh/pages/ncam/

The National Center for Accessible Media, part of WGBH, Boston, has a long history of working to make media accessible to undeserved populations such as disabled persons, minority-language users and people with low literacy skills.

National Fair Housing Advocate online: http://murmur.arch.gatech.edu/crt/crthome.htm

This site has a digest of current news stories and articles from US newspapers and journals about issues on housing for people with disabilities and housing discrimination. News stories stay up about a week, then they go to an on-line archive. Sponsored by HUD and maintained by the Tennessee Fair Housing Council, this site has a search engine.

WebABLE!: http://www.yuri.org/webable/

WebABLE! describes themselves as "the authoritative Web site for disability-related internet resources." This site is a good resource–their resource database lists hundreds of sites; there are links to discussion groups and forums and their library lists publications including online journals and ordering information.

Books

Beautiful Universal Design: *a Visual Guide*

by Cynthia A. Leibrock and James Evan Terry. John Wiley & Sons, Inc., 1999, 203 pages.

This title is a revised version of Leibrok's earlier work, *Beautiful Barrier-Free* published by Van Nostrand Reinhold in 1993. The terminology within the text has changed to reflect inclusiveness although some text remains virtually unchanged. Gone are the icons before each paragraph of text denoting particular relevance for wheelchair users, hearing impaired, etc. This is a nice touch, again reinforcing the idea that universal design is "simple and invisible."

The organization of the book is identical to the 1993 edition, but there are significant changes under each of the nine major topics –for example an expanded discussion of parking spaces, new technological advances in accessories and equipment and the inclusion of more complete ADA requirements. A new chapter,"Case Studies," discusses universal design in other environments–libraries, museums, and health care facilities are among them.

Home Sweet Home:
How to Help Older Adults Live Independently

by the Aid Association for Lutherans, 1998, 78 pages.

This book and accompanying video focuses on assistive devices designed to allow older people to stay in their home longer. A good portion of the book is devoted to suggestions for communicating with older family members about their needs, fears, and concerns. Many illustrations on assistive devices are included.

For more information about this publication contact the Aid Association for Lutherans, 1-800-225-5225, or e-mail: aalmail.@aal.org

Wanted

Designers with Disabilities!!

Designers with disabilities are needed for interviews that will be part of a new project, Access to Design Professions.

"Access to the Design Professions was inspired by [the late] Ron Mace,"said Elaine Ostroff, project director. "We want to find ways that more people with disabilities can enter the design fields and use their personal experience to contribute to great design, as Ron did."

The interviews will be used as the base for an Action Plan, to be created by a national task force. The task force will include stakeholders in career development, employment initiatives, vocational counseling and design education-people who can identify pilot projects that begin to address the issue of the lack of people with disabilities in design.

"Ron Mace wanted to form an international network of designers with disabilities. We plan to follow through with his idea and create that network," said Ostroff.

The project is being funded by the National Endowment for the Arts through a Universal Design Leadership Initiative Grant that has been awarded to the Adaptive Environments Center.

For more information, contact Ostroff at 617-695-1225, ext. 30 or at elaineos@ici.net.

Center Celebrates 10 Years

This summer, The Center for Universal Design will celebrate a decade of achievement by hosting a symposium on universal design on Saturday, September 18 from 9:00 AM to 2:00 PM at the Talley Student Center on the campus of North Carolina State University in Raleigh. Among the scheduled speakers is John Paul Scott, AIA, Director of Regulatory Design at Walt Disney Imagineering. Mr. Scott will talk about Disney's efforts to accommodate guests through the approach of universal design. A reception will follow the symposium. ***All events are free and open to the public.***

Established in 1989 with funding from the U.S. Department of Education as the Center for Accessible Housing, the name was officially changed in 1996 to the Center for Universal Design to reflect a broadened focus across the built environment. That same year, the Center was recognized by the University of North Carolina (UNC) General Administration as an officially chartered Center of the UNC system. As part of the School of Design at NC State University, the Center receives funding from a variety of public and private sources and undertakes research, design, and educational projects to improve peoples' abilities to live in and use the environments around them.

RSVP by calling the Center at 919-515-3082 (V/TTY).

✂ *please cut along the dotted line* ✂

UD Newsline

THE CENTER FOR UNIVERSAL DESIGN
School of Design
NC State University
Box 8613
Raleigh, NC 27695-8613
800-647-6777 (V/TTY)

Four issues of ***UD Newsline*** for only $25. Each issue contains articles on universal design, housing issues, activities of the Center and other organizations, technical design tips, and updates on new materials and resources.

To order, complete this form and send it along with your check or purchase order for $25, payable to The Center for Universal Design, to the address above.

Back issues of *UD Newsline* can be ordered for $7.50 each.

Format	# Subscriptions	Price
Print	@ $25 =	$
Large Print	@ $25 =	$
Diskette ☐ PC ☐ Mac	@ $25 =	$
	TOTAL ENCLOSED =	$

Name _____

Affiliation _____

_____

Address _____

City _____ **St** _____ **Zip** _____

Country _____

Telephone _____ **Fax** _____

E-mail _____

Last Call for Papers!

Papers are being solicited for the second International Conference on Universal Design: Designing for the 21st Century, which will be held in Providence, Rhode Island, June 14-18, 2000.

Find detailed information about the conference at the Adaptive Environments Center Website: http://www.adaptenv.org/

What Do You Think?

- What do you like about *UDNewsline* ?
- What other information or topics would you like to see included in these pages?
- Who among you are practicing, teaching or benefiting from universal design?

I'm interested in starting a reader input page for this newsletter where readers can comment about newsletter articles, share stories, experiences, or information--a forum of sorts. **Address comments to me by e-mail (andrea_gabriel@ncsu.edu), or by conventional mail: Andrea Gabriel, The Center for Universal Design, Box 8613, N.C.S.U., Raleigh, NC 27695-8613.**

How to Reach Us

Telephone:
1-800-647-6777 (Voice and TTY)
or 919-515-3082
You may leave a message

Fax:
919-515-3023

Operating hours are:
8:00 A.M.-5:00 P.M. Eastern Time
Monday-Friday except holidays

Visit our Website:
http://www.design.ncsu.edu/cud

E-mail:
cud@ncsu.edu

Write:
The Center for Universal Design
Box 8613
NC State University
Raleigh, NC 27695-8613

THE CENTER FOR **UNIVERSAL DESIGN**
NC State University
School of Design
Box 8613
Raleigh, NC 27695-8613

Address Service Requested

NONPROFIT ORG.
US POSTAGE
PAID
RALEIGH,NC
PERMIT NO. 2353